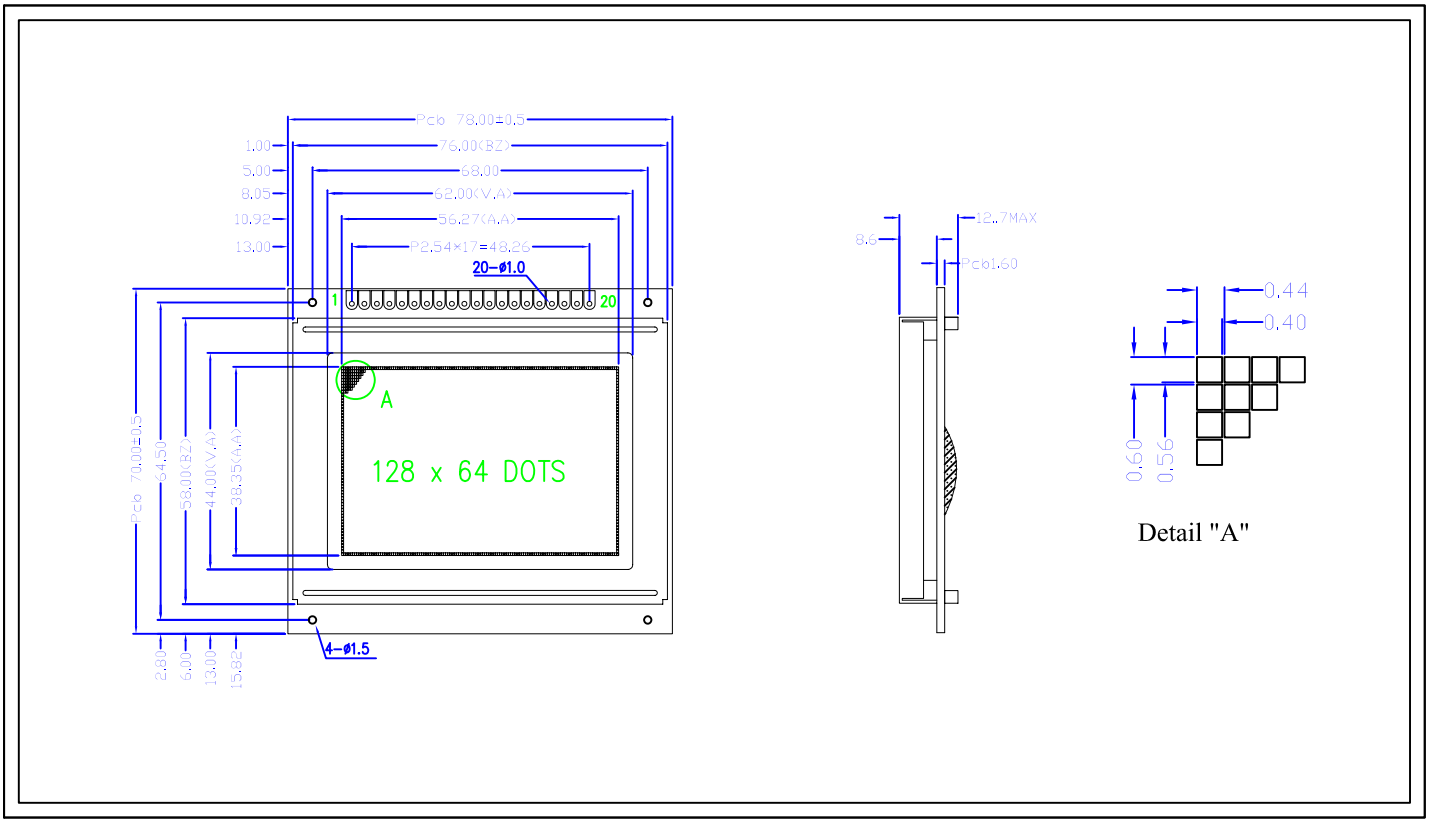

ITEM	SYMBOL	MIN.	MAX.	UNIT
POWER SUPPLY(VDD)	V_{DD}	-0.3	7.0	V
INPUT VOLTAGE	V_I	-0.3	VDD+0.3	V
OPERATING TEMP	Top	-20	+70	℃
STORAGE TEMP	Tst	-30	+80	℃

ITEM	STANDARD VALUE
Display Type	128 x 64 Dots
LCD Type	STN(Blue/Yellow-Green/Gray) ; FSTN
Drive Method	1/64Duty, 1/9Bias, VOP:10.5V
Viewing Angle	6 O'clock ; 12 O'clock
Backlight Color	White ; Yellow-Green
Control IC	S6B0108

Driver Diagram

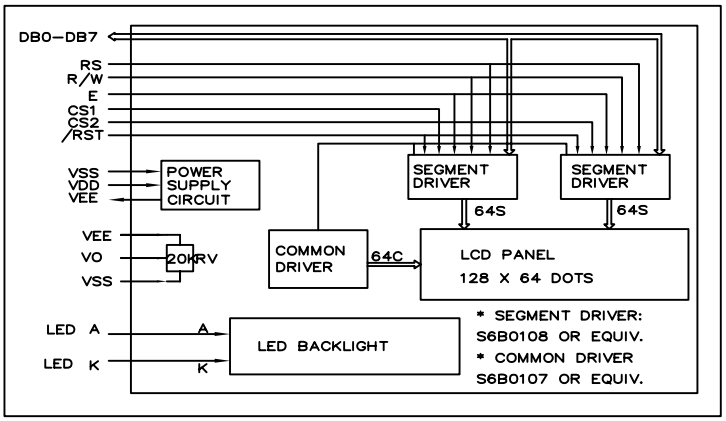

PIN DESCRIPTION			
PIN	SYMBOL	LEVEL	FUNCTION
1	CS1	H	Chip1 Select
2	CS2	H	Chip2 Select
3	VSS	0V	Ground
4	VDD	H	Power Supply For Logic
5	V0	--	Power Supply For LCD
6	RS	H/L	L:Instrction Code H:Data Code
7	RW	L	H:Read L: Write
8	E	H	Chip Enable Signal
9-16	DB0-DB7	H/L	Data Bus
17	RST	L	Reset Signal
18	VEE	--	Negative Voltage For LCD Driving
19	LEDA	H	Backlight anod
20	LEDK	L	Backlight Negative